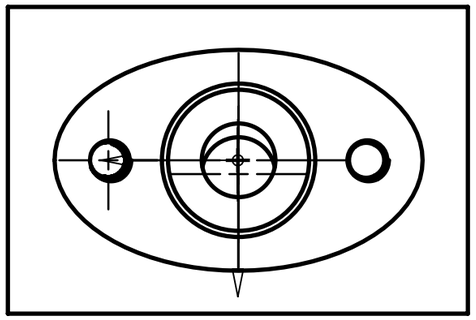

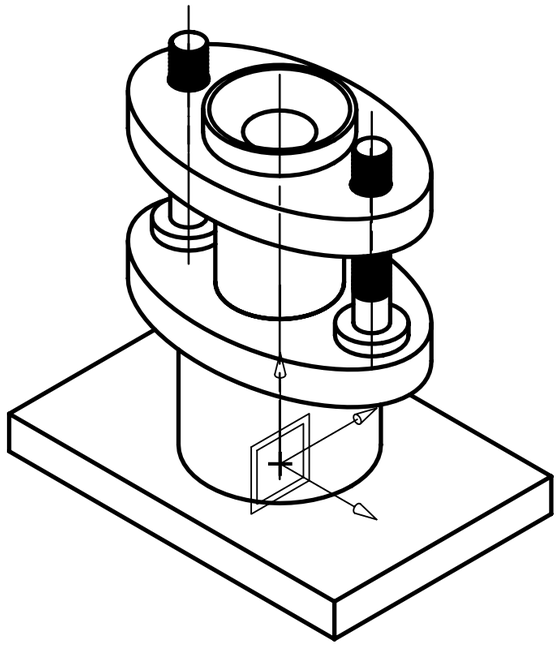

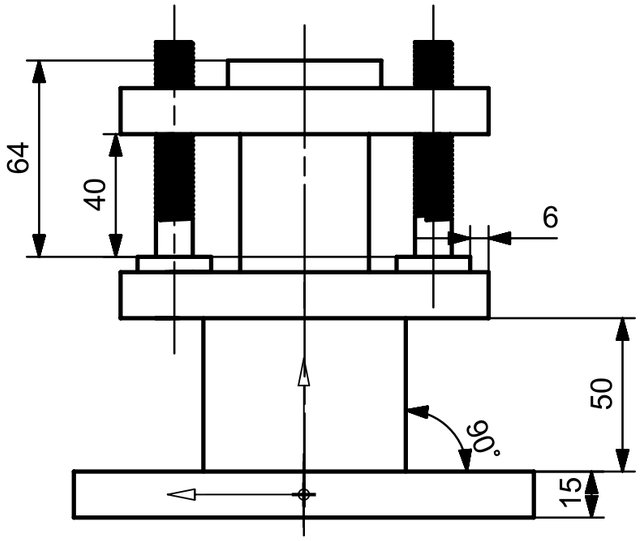

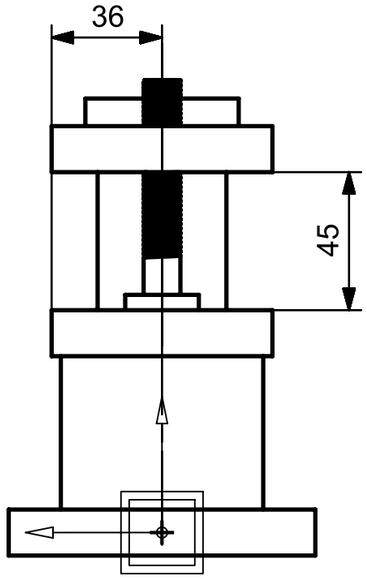

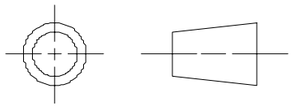

ALL DIMENSIONS IN MM

SIEMENS		THIS DRAWING HAS BEEN PRODUCED USING AN EXAMPLE TEMPLATE PROVIDED BY SIEMENS PLM SOFTWARE		
FIRST ISSUED	01/01/2026	TITLE		
DRAWN BY	S.MAHAVISHVA			
CHECKED BY				
APPROVED BY		SIZE	DRG NO.	SHEET REV
		A3	stuffing box 2	A
		SCALE 1:1		SHEET 1 OF 2
				A3

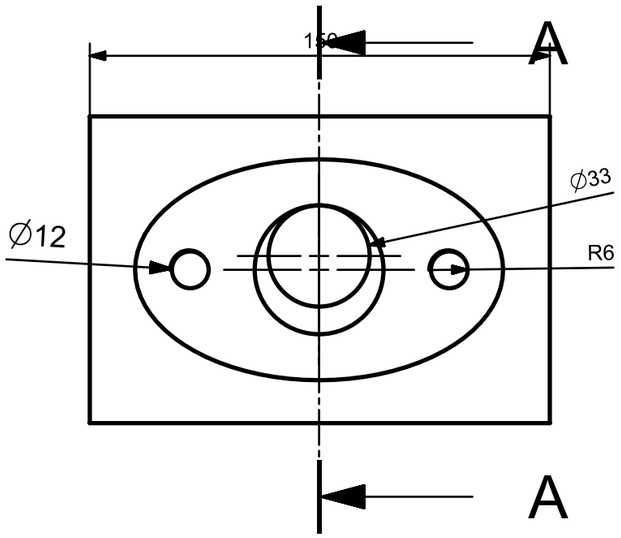

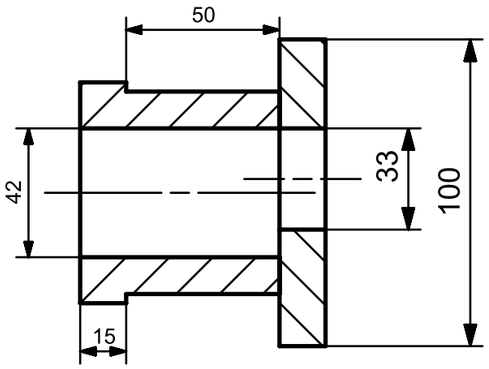

SECTION A-A

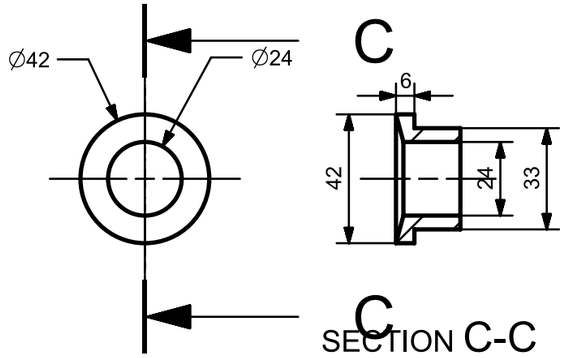

SECTION C-C

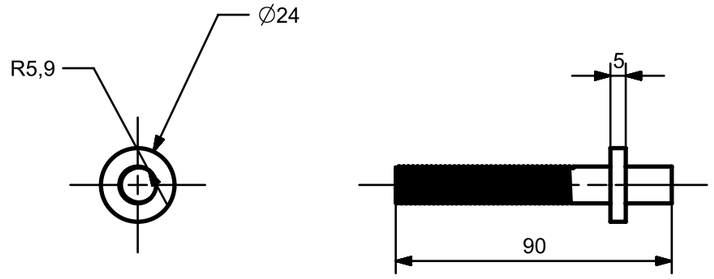

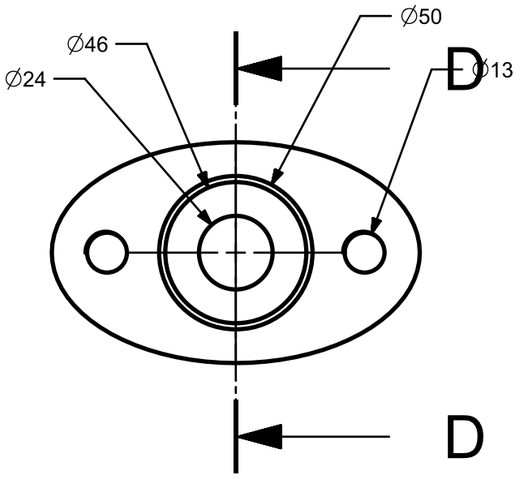

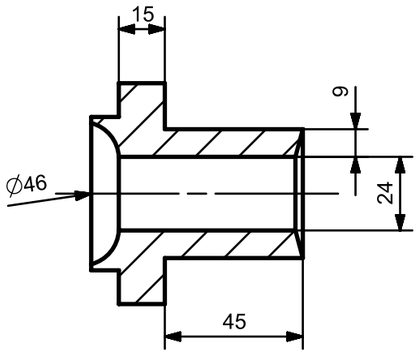

SECTION D-D

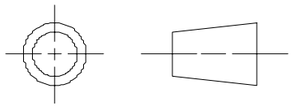

ALL DIMENSIONS IN MM

SIEMENS		THIS DRAWING HAS BEEN PRODUCED USING AN EXAMPLE TEMPLATE PROVIDED BY SIEMENS PLM SOFTWARE
FIRST ISSUED	01/01/2026	TITLE
DRAWN BY	S.MAHAVISHVA	
CHECKED BY		
APPROVED BY		SIZE A3 / DRG NO. stuffing box 2 / SHEET REV A
		SCALE 1:1 / SHEET 2 OF 2 / A3